# GRH Hydraulic Product Guide

In an effort to make Our Customer " Quickly to understand GRH's Products ",our Team is working to simplify the pricing, ordering and delivery of our products to our distributors so that GRH is your first choice in solving your customers' needs.

This guide provides the details on each product family and specific products in stock at GRH as well as information as to why a specific family should be chosen.

—www.grhpower.com —

# STANDARD CAPABILITIES GUIDE TO GEAR PUMPS AND MOTORS

Gear pumps and motors meet a wide range of mobile and industrial applications. SAE and EUROPEAN mounting flanges and rear covers are available in both cast iron and aluminum for reduced weight. The extruded aluminum body houses， single piece gear, bush of pressure balancing that provides the highest volumetric and overall efficiencies available. Exceptionally large bearings make possible the most complete range of drive shafts in spline, parallel keyed, and tapered versions to meet all SAE, DIN.

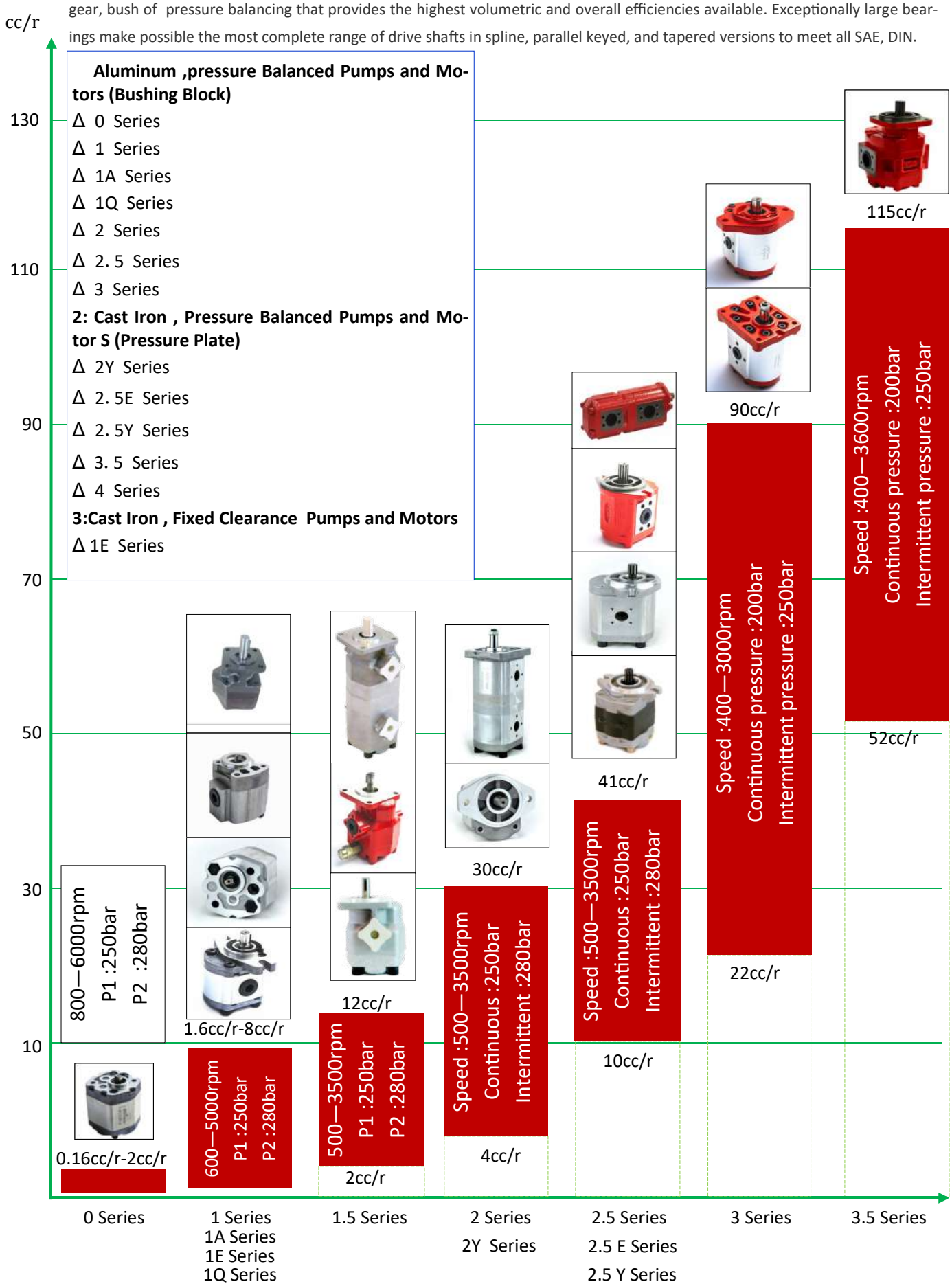

# STANDARD CAPABILITIES GUIDE TO GEAR PUMPS AND MOTORS

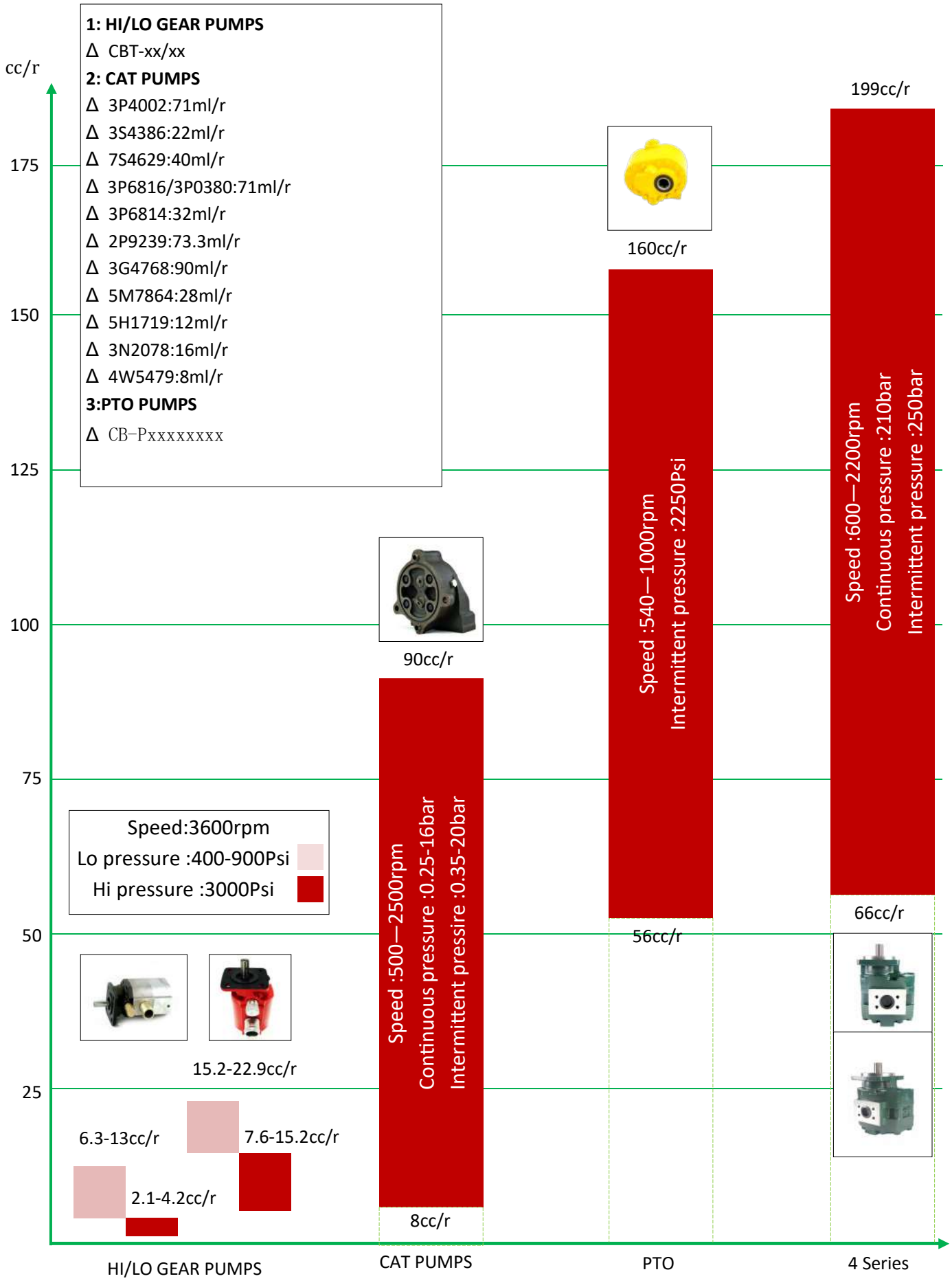

# ORDER CODE

| Pos.1 | 2 | | 3 | | 4 | | 5 | 6 | | 7 | | 8 | | 9 | | - | O | - | F | Y |
|---|---|---|---|---|---|---|---|---|---|---|---|---|---|---|---|---|---|---|---|---|
| Group | Improve number | | Gear pump | | Pressure (bar) | | ml/r(cc/r) | Ports INLET/OUTLET | | Shaft+ flange | | Rotation | | Ports position | | | | | | |
| 0 | / | | P | | G | 250 | 0.16 | L07 | G1/4 /Φ5.5xΦ9.6x1.45<br>Hole with seal groove | B01 | TABG + THROUGHT 2 BOLT(22mm PILOT) | B<br>L<br>R | Bi-direction<br>CCW<br>CW | BF<br>BB<br>BS<br>SB<br>SF<br>SS | Back inlet/front outlet<br>Back inlet/back outlet<br>Back inlet/side outlet<br>Side inlet/back outlet<br>Side inlet/Front outlet<br>Side inlet/side outlet | | X | | X | √ |
| | | | | | | | 0.25 | | | | | | | | | | | | | |
| | | | | | | | 0.38 | | | | | | | | | | | | | |
| | | | | | | | 0.50 | | | | | | | | | | | | | |
| | | | | | | | 0.75 | | | | | | | | | | | | | |
| | | | | | F | 200 | 1.00 | | | | | | | | | | | | | |
| | | | | | | | 1.25 | | | | | | | | | | | | | |
| | | | | | | | 1.50 | | | | | | | | | | | | | |
| | | | | | | | 1.75 | | | | | | | | | | | | | |
| | | | | | | | 2.00 | | | | | | | | | | | | | |
| 1 | AT<br>AB<br>A<br>Q | Cast iron covers<br>Rotation could be changed<br>Aluminum covers<br>Two-piece aluminum front cover and pump body | P<br>DP | Single Pump<br>Double Pump | G | 250 | 1.10 | L01<br>L05<br>L61<br>L44<br>L46<br>F01 | G3/8 /Φ9xΦ12.7x1.45 Hole with seal groove<br>G1/2/ G3/8<br>M14x1.5(Facing)/M14x1.5(Facing)<br>G3/8/ G1/4<br>G3/8/ G3/8<br>X (Φ30xM6xΦ12)/ (Φ30xM6xΦ12) | B02<br>Z02<br>P01 | TABG + THROUGHT 2 BOLT(32mm PILOT)<br>EUR TAPER 1:8 + EUR RECTANGULAR(25.4mm PILOT)<br>Φ12.7 + SAE A | B<br>L<br>R | Bi-direction<br>CCW<br>CW | BF<br>BB<br>BS<br>SB<br>SF<br>SS | Back inlet/front outlet<br>Back inlet/back outlet<br>Back inlet/side outlet<br>Side inlet/back outlet<br>Side inlet/Front outlet<br>Side inlet/side outlet | | X | | √ | √ |
| | | | | | | | 1.30 | | | | | | | | | | | | | |
| | | | | | | | 1.60 | | | | | | | | | | | | | |
| | | | | | | | 1.80 | | | | | | | | | | | | | |
| | | | | | | | 2.10 | | | | | | | | | | | | | |
| | | | | | | | 2.70 | | | | | | | | | | | | | |
| | | | | | F | 200 | 3.20 | | | | | | | | | | | | | |
| | | | | | | | 3.70 | | | | | | | | | | | | | |
| | | | | | | | 4.20 | | | | | | | | | | | | | |
| | | | | | | | 4.80 | | | | | | | | | | | | | |
| | | | | | | | 5.80 | | | | | | | | | | | | | |
| | | | | | | | 8.00 | | | | | | | | | | | | | |
| 1.5 | AT<br>AB<br>A | Cast iron covers<br>Rotation could be changed<br>Aluminum covers | P<br>DP | Single Pump<br>Double Pump | G | 250 | 2 | L29<br>F50 | NPT1/2/ NPT1/2<br>十（25.2x25.2）xM6xΦ14.5/(25.2x25.2) xM6xΦ14.5 | P04 | 4-Φ9 Square Flange, Tang shaft Φ12.5mm<br>Key 4x6.5x16mm | B<br>L<br>R | Bi-direction<br>CCW<br>CW | BF<br>BB<br>BS<br>SB<br>SF<br>SS | Back inlet/front outlet<br>Back inlet/back outlet<br>Back inlet/side outlet<br>Side inlet/back outlet<br>Side inlet/Front outlet<br>Side inlet/side outlet | | X | | √ | √ |
| | | | | | | | 3 | | | | | | | | | | | | | |
| | | | | | | | 4 | | | | | | | | | | | | | |
| | | | | | | | 5 | | | | | | | | | | | | | |
| | | | | | | | 6 | | | | | | | | | | | | | |
| | | | | | F | 200 | 7 | | | | | | | | | | | | | |
| | | | | | | | 8 | | | | | | | | | | | | | |
| | | | | | | | 9 | | | | | | | | | | | | | |
| | | | | | | | 11 | | | | | | | | | | | | | |
| | | | | | | | 12 | | | | | | | | | | | | | |
| 2 | A<br>AB<br>AH<br>L<br>/ | Cast iron covers<br>12Z Low noise gear pump<br>14Z low noise gear pump<br>Helical gear pump<br>Aluminum covers | P<br>DP<br>TP | Single Pump<br>Double Pump<br>Triple Pump | G | 250 | 4 | L08<br>L32<br>L10<br>L50<br>LJ37<br>LJ39<br>F60<br>F04<br>F06<br>F172 | G3/4 / G1/2<br>NPT3/4/ NPT1/2<br>PT3/4/ PT1/2<br>M20x1.5/M18x1.5<br>(7/8-14UNF-2B)/(3/4-16UNF-2B)<br>(1-1/16-12UN-2B)/(7/8-14UNF-2B)<br>X(Φ40xM6xΦ15)/(Φ35xM6xΦ15)<br>X(Φ40xM6xΦ20)/(Φ35xM6xΦ15)<br>十(Φ40xM8xΦ20)/(Φ30xM6xΦ13)<br>十(Φ30xM6xΦ13)/(Φ30xM6xΦ13) | P02<br>P03<br>S02<br>S03<br>Z03<br>Z18<br>Z11<br>B11 | Φ18 + SAE A<br>Φ19.05+ SAE A<br>Spline 11Z 16/32 + SAE A<br>Spline 9Z 16/32 + SAE A<br>EUR TAPER 1:8 + EUR RECTANGULAR(36.5mm PILOT)<br>GERMAN TAPER 1:5 + GERMAN RECTANGULAR<br>TABG + THROUGHT 2 BOLT(50mm PILOT)<br>TABG + THROUGHT 4 BOLT(50mm PILOT) | L<br>R | CCW<br>CW | BB<br>BS<br>SB<br>SS | Back inlet/back outlet<br>Back inlet/side outlet<br>Side inlet/back outlet<br>Side inlet/side outlet | | √ | | √ | √ |
| | | | | | | | 6 | | | | | | | | | | | | | |
| | | | | | | | 8 | | | | | | | | | | | | | |
| | | | | | | | 10 | | | | | | | | | | | | | |
| | | | | | | | 12 | | | | | | | | | | | | | |
| | | | | | | | 14 | | | | | | | | | | | | | |
| | | | | | F | 200 | 16 | | | | | | | | | | | | | |
| | | | | | | | 18 | | | | | | | | | | | | | |
| | | | | | | | 20 | | | | | | | | | | | | | |
| | | | | | | | 23 | | | | | | | | | | | | | |
| | | | | | | | 25 | | | | | | | | | | | | | |
| | | | | | | | 28 | | | | | | | | | | | | | |
| | | | | | | | 30 | | | | | | | | | | | | | |

—www.grhpower.com —

# ORDER CODE

| Pos.1 | 2 | | 3 | | 4 | | 5 | 6 | | 7 | | 8 | | 9 | | - | O | - | F | Y |
|---|---|---|---|---|---|---|---|---|---|---|---|---|---|---|---|---|---|---|---|---|
| Group | Improve number | | Gear pump | | Pressure (bar) | | ml/r (cc/r) | Ports INLET/OUTLET | | Shaft+ flange | | Rotation | | Ports position | | | | | | |
| 2.5 | A<br>C<br>/ | Cast iron covers<br>Aluminum covers, cast iron body, side plate structure<br>Aluminum covers | P | | G | 250 | 20<br>25<br>27 | LJ02<br>LJ03<br>F77 | G1/ G1/2<br>G1/ G3/4<br>□(30.2x58.7)xM10xΦ25/(26.2x52.4)xM10xΦ19 | S02 | Spline 11Z 16/32 + SAE A | B<br>L<br>R | Bi-direction<br>CCW<br>CW | BB<br>BS<br>SB<br>SS | Back inlet/back outlet<br>Back inlet/side outlet<br>Side inlet/back outlet<br>Side inlet/side outlet | | √ | | √ | √ |
| | | | | | F | 200 | 30<br>32<br>36<br>40 | | | | | | | | | | | | | |
| 3 | A<br>B<br>E<br>/ | Cast iron covers<br>Side plate structure<br>Cast iron covers with side plate structure<br>Aluminum covers | P<br>DP<br>TP | Gear Pump<br>Double Pump<br>Triple Pump | G | 250 | 22<br>26<br>34<br>39<br>43 | F36<br>F10<br>F12<br>LJ53<br>L00 | □(58.7x28.4)x(7/16-14UNC)xΦ33/(52.4x26.2)x(3/8-16UNC)xΦ27<br>□(Φ56xM10xΦ27)/ (Φ56XM10XΦ19)<br>□(Φ62xM10xΦ33)/ (Φ51XM10XΦ27)<br>(1-5/8-12UN-2B)/(1-5/16-12UN-2B)<br>G1/G1 | S05<br>Z05 | Spline 13Z 16/32 + SAE A<br>EUR TAPER 1:8 + EUR RECTANGULAR(50.8mm PILOT) | B<br>L<br>R | Bi-direction<br>CCW<br>CW | BB<br>BS<br>SB<br>SS | Back inlet/back outlet<br>Back inlet/side outlet<br>Side inlet/back outlet<br>Side inlet/side outlet | | √ | | √ | √ |
| | | | | | F | 200 | 51<br>60<br>70<br>78<br>89 | | | | | | | | | | | | | |
| 3.5 | E<br>B<br>/ | Cast iron covers<br>Side plate structure<br>Aluminum covers | P<br>DP<br>TP<br>M | Gear pump<br>Double pump<br>Triple pump<br>Motor | F | 200 | 52<br>63<br>73<br>85<br>93<br>104<br>115 | L00<br>L99 | G1/G1<br>(G1-1/4)/(G1-1/4) | S02 | Spline 11Z 16/32 + SAE A | B<br>L<br>R | Bi-direction<br>CCW<br>CW | BB<br>BS<br>SB<br>SS | Back inlet/back outlet<br>Back inlet/side outlet<br>Side inlet/back outlet<br>Side inlet/side outlet | | √ | | √ | √ |
| 4 | / | Cast iron covers | P | Gear pump | F | 200 | 66<br>83<br>91<br>99<br>116<br>132<br>145<br>149<br>166<br>182<br>199 | F16 | ┼（Φ65xM10xΦ30）/（Φ65xM10xΦ24） | S68 | Spline 14Z 12/24+SAE BB | B<br>L<br>R | Bi-direction<br>CCW<br>CW | BB<br>BS<br>SB<br>SS | Back inlet/back outlet<br>Back inlet/side outlet<br>Side inlet/back outlet<br>Side inlet/side outlet | | √ | | √ | √ |

O:Outboard bearing
F:FPM seal
Y:Relief valve
┼:Diamond port
□:#-type port
X:X-type port

—www.grhpower.com —

# Group 1A Gear Pumps and Motors "Quiet Series"

Constructed of an aluminum center section and cast iron /aluminum end plates ,model 1APF is a high pressure hydraulic gear Pumps and Motor with 8 displacement sizes from 0.07-0.48in³/rev(1.3-8.0cm³/rev). The standard mounting flange is a SAE AA - 2 bolt. Standard ports are SAE-6 inlet and SAE-6 outlet; and the driver shaft is a 1/2" diameter straight shaft with 1/8" key.

## Recommended Working Conditions

FILTRATION:25 micron or better
INLET PRESSURE:12-32 psi absolute
AMBIENT TEMP:-22°-55°C(-8°-130°F)
OIL VISCOSITY:6-200 cSt
OIL TEMP:-25°-80°C(-12°-175°F)

## Technical Specifications

| Model | Displacement | | Pressure | | Speed | | Weight |
|---|---|---|---|---|---|---|---|
| | in^3/rev | cm^3/rev | Cont. | Peak | Min.RPM | Max.RPM | lbs |
| 1APF-1.3 | 0.07 | 1.3 | 2900 | 3625 | 650 | 4000 | 2.02 |
| 1APF-2.0 | 0.12 | 2.0 | 2900 | 3625 | 650 | 4000 | 2.31 |
| 1APF-2.7 | 0.16 | 2.7 | 2900 | 3625 | 650 | 4000 | 2.68 |
| 1APF-3.4 | 0.20 | 3.4 | 2900 | 3625 | 650 | 4000 | 2.99 |
| 1APF-4.1 | 0.25 | 4.1 | 2900 | 3625 | 650 | 4000 | 3.34 |
| 1APF-5.1 | 0.31 | 5.1 | 2900 | 3625 | 650 | 4000 | 3.78 |
| 1APF-6.1 | 0.30 | 6.1 | 2900 | 3625 | 650 | 3600 | 4.18 |
| 1APF-8.0 | 0.48 | 8.0 | 2900 | 3625 | 650 | 3600 | 5.01 |

## Installation Data

| Model | L | | L1 | | Ports | |
|---|---|---|---|---|---|---|
| | in | cm | in | cm | In | Out |
| 1APF-1.3 | 3.23 | 8.2 | 1.65 | 4.2 | SAE-6 | SAE-6 |
| 1APF-2.0 | 3.30 | 8.4 | 1.69 | 4.3 | SAE-6 | SAE-6 |
| 1APF-2.7 | 3.39 | 8.6 | 1.73 | 4.4 | SAE-6 | SAE-6 |
| 1APF-3.4 | 3.46 | 8.8 | 1.77 | 4.5 | SAE-6 | SAE-6 |
| 1APF-4.1 | 3.54 | 9.0 | 1.81 | 4.6 | SAE-6 | SAE-6 |
| 1APF-5.1 | 3.66 | 9.3 | 1.87 | 4.7 | SAE-6 | SAE-6 |
| 1APF-6.1 | 3.78 | 9.6 | 1.93 | 4.9 | SAE-6 | SAE-6 |
| 1APF-8.0 | 3.97 | 10.1 | 2.01 | 5.1 | SAE-6 | SAE-6 |

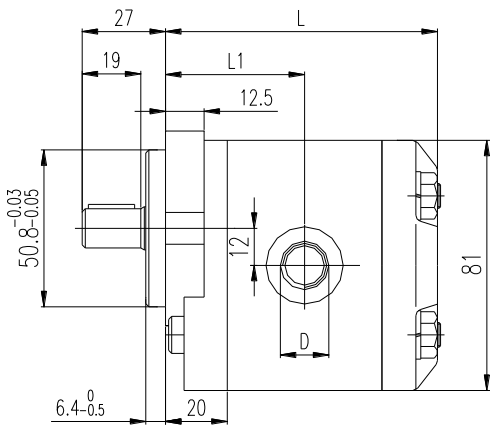


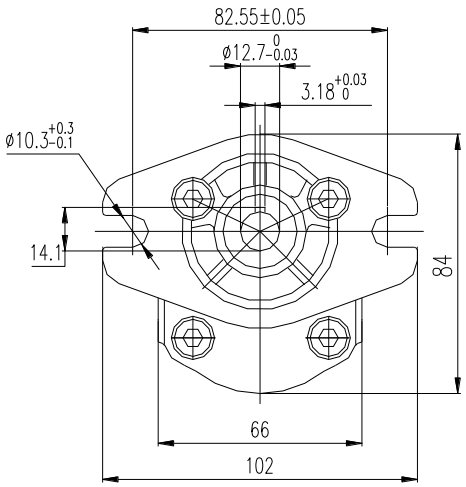


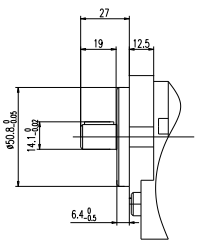


P01

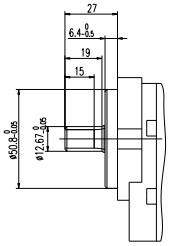


S01

| Spline parameter | |
|---|---|
| DP | 20/40 |
| Z | 9 |
| αD | 30° |

| Ordering Example: | Category + Group | Displacement | Port Combo | Drive Shaft | Rotation | Port | Options |
|---|---|---|---|---|---|---|---|
| | 1APF | 1.3 | LJ66 | P01 | L | SS | |

| Category + Group | Displacement | Port Combo | Drive Shaft | Rotation | Port | Options |
|---|---|---|---|---|---|---|
| Pump:1APF<br>Motor:1AMF | 1.3/2.0/2.7/3.4<br>4.1/5.1/6.1/8.0 | LJ66= -6-6 | P01=1/2"KEYED | L=CCW<br>R=CW<br>B=Bi Ro | SS=SIDE PORT<br>BB=REAR PORT | |

# Group 1 Gear Pumps and Motors "Quiet Series"

Constructed of an aluminum center section and cast iron end plates ,model 1PF is a high pressure hydraulic gear Pumps and Motor with 12 displacement sizes from 0.07-0.49in³/rev(1.1-8.0cm³/rev). The standard mounting flange is a European - 4 bolt. Standard ports are G3/8 inlet and G3/8 outlet; and the driver shaft is a taper shaft with 1:8.

## Recommended Working Conditions

FILTRATION:25 micron or better
INLET PRESSURE:12-32 psi absolute
AMBIENT TEMP:-22°-55°C(-8°-130°F)
OIL VISCOSITY:6-200 cSt
OIL TEMP:-25°-80°C(-12°-175°F)

## Technical Specifications

| Model | Displacement | | Pressure | | Speed | | Weight |
|---|---|---|---|---|---|---|---|
| | in^3/rev | cm^3/rev | Cont. | Peak | Min.RPM | Max.RPM | Kg |
| 1PF-1.1 | 0.07 | 1.1 | 2900 | 3625 | 600 | 6000 | 1.1 |
| 1PF-1.3 | 0.08 | 1.3 | 2900 | 3625 | 600 | 6000 | 1.1 |
| 1PF-1.6 | 0.10 | 1.6 | 2900 | 3625 | 600 | 6000 | 1.1 |
| 1PF-1.8 | 0.11 | 1.8 | 2900 | 3625 | 600 | 6000 | 1.1 |
| 1PF-2.1 | 0.13 | 2.1 | 2900 | 3625 | 600 | 6000 | 1.1 |
| 1PF-2.7 | 0.16 | 2.7 | 2900 | 3625 | 600 | 6000 | 1.1 |
| 1PF-3.2 | 0.20 | 3.2 | 2900 | 3625 | 600 | 5000 | 1.1 |
| 1PF-3.7 | 0.23 | 3.7 | 2900 | 3625 | 600 | 4500 | 1.1 |
| 1PF-4.2 | 0.26 | 4.2 | 2900 | 3625 | 600 | 4000 | 1.1 |
| 1PF-4.8 | 0.29 | 4.8 | 2320 | 2900 | 600 | 3500 | 1.1 |
| 1PF-5.8 | 0.35 | 5.8 | 2320 | 2900 | 600 | 2900 | 1.1 |
| 1PF-8.0 | 0.49 | 8.0 | 2320 | 2900 | 600 | 2100 | 1.1 |

## Installation Data

| Model | L(B02) | | L(Z02) | | L1(B02) | | L1(Z02) | | Ports | |
|---|---|---|---|---|---|---|---|---|---|---|
| | in | cm | in | cm | in | cm | in | cm | In | Out |
| 1PF-1.1 | 2.91 | 7.4 | 2.95 | 7.5 | 1.30 | 3.3 | 1.30 | 3.3 | G3/8 | G3/8 |
| 1PF-1.3 | 2.95 | 7.5 | 2.99 | 7.6 | 1.32 | 3.35 | 1.34 | 3.4 | G3/8 | G3/8 |
| 1PF-1.6 | 2.99 | 7.6 | 3.07 | 7.8 | 1.34 | 3.4 | 1.38 | 3.5 | G3/8 | G3/8 |
| 1PF-1.8 | 3.03 | 7.7 | 3.09 | 7.85 | 1.36 | 3.45 | 1.4 | 3.55 | G3/8 | G3/8 |
| 1PF-2.1 | 3.07 | 7.8 | 3.11 | 7.9 | 1.38 | 3.5 | 1.42 | 3.6 | G3/8 | G3/8 |
| 1PF-2.7 | 3.15 | 8.0 | 3.19 | 8.1 | 1.42 | 3.6 | 1.46 | 3.7 | G3/8 | G3/8 |
| 1PF-3.2 | 3.23 | 8.2 | 3.27 | 8.3 | 1.46 | 3.7 | 1.50 | 3.8 | G3/8 | G3/8 |
| 1PF-3.7 | 3.31 | 8.4 | 3.35 | 8.5 | 1.50 | 3.8 | 1.54 | 3.9 | G3/8 | G3/8 |
| 1PF-4.2 | 3.39 | 8.6 | 3.43 | 8.7 | 1.54 | 3.9 | 1.57 | 4.0 | G3/8 | G3/8 |
| 1PF-4.8 | 3.46 | 8.8 | 3.50 | 8.9 | 1.57 | 4.0 | 1.61 | 4.1 | G3/8 | G3/8 |
| 1PF-5.8 | 3.62 | 9.2 | 3.66 | 9.3 | 1.65 | 4.2 | 1.69 | 4.3 | G3/8 | G3/8 |
| 1PF-8.0 | 3.94 | 10.0 | 3.98 | 10.1 | 1.81 | 4.6 | 1.85 | 4.7 | G3/8 | G3/8 |

Z02

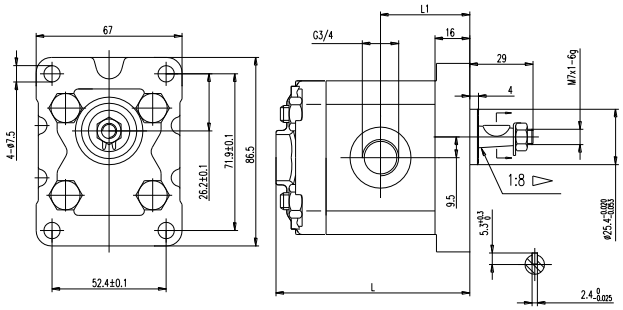

B02

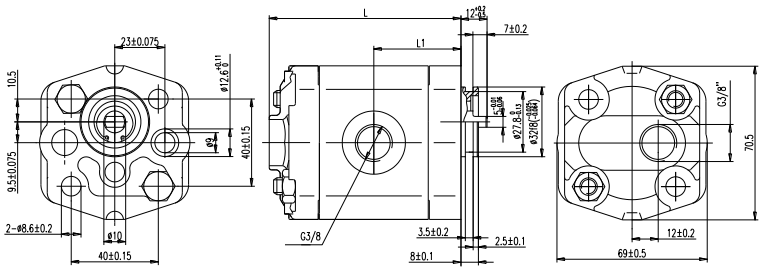

| Ordering Example: | Category + Group | Displacement | Port Combo | Drive Shaft | Rotation | Port | Options |
|---|---|---|---|---|---|---|---|
| | 1PF | 1.1 | L46 | Z02 | L | SS | |

| Category + Group | Displacement | Port Combo | Drive Shaft | Rotation | Port | Options |
|---|---|---|---|---|---|---|
| Pump:1PF<br>Motor:1MF | 1.1/1.3/1.6/1.8<br>2.1/2.7/3.2/3.7<br>4.2/4.8/5.8/8.0 | L46=G3/8-G3/8 | Z02=Eur Shaft 1:8<br>B02=Through 2 bolt 32 pilot | L=CCW<br>R=CW<br>B=Bi Ro | SS=SIDE PORT<br>BB=REAR PORT | |

# Group 2 Gear Pumps and Motors "SAE-A "

Constructed of an aluminum center section and cast iron/aluminum end plates ,2AHPF is a high pressure hydraulic gear Pumps and Motor with 11 displacement sizes from 0.24-1.52in³/rev(4-25cm³/rev). The standard mounting flange is a SAE A - 2 bolt. Standard drive shaft is a 5/8" straight shaft with 5/32"key. Additional shaft options are available as outlined in the Ordering Example.

## Recommended Working Conditions

FILTRATION:25 micron or better
INLET PRESSURE:12-32 psi absolute
AMBIENT TEMP:-22°-55°C(-8°-130°F)
OIL VISCOSITY:6-200 cSt
OIL TEMP:-25°-80°C(-12°-175°F)

Flow Rate (gpm) = Displacement(in³/rev) X Speed（rpm）/231
Volumetric efficiency ≥93%

## Technical Specifications

| Model | Displacement | | Pressure | | Speed | | Weight |
|---|---|---|---|---|---|---|---|
| | in^3/rev | cm^3/rev | Cont. | Peak | Min.RPM | Max.RPM | lbs |
| 2AHPF-4 | 0.24 | 4 | 2900 | 3625 | 600 | 4000 | 7.80 |
| 2AHPF-6 | 0.36 | 6 | 2900 | 3625 | 600 | 4000 | 8.05 |
| 2AHPF-8 | 0.48 | 8 | 2900 | 4061 | 600 | 4000 | 8.25 |
| 2AHPF-10 | 0.61 | 10 | 2900 | 4061 | 600 | 3500 | 8.30 |
| 2AHPF-12 | 0.73 | 12 | 2900 | 4061 | 600 | 3500 | 8.55 |
| 2AHPF-14 | 0.85 | 14 | 2900 | 4061 | 600 | 3500 | 8.70 |
| 2AHPF-16 | 0.97 | 16 | 2900 | 4061 | 600 | 3000 | 8.85 |
| 2AHPF-18 | 1.09 | 18 | 2900 | 4061 | 600 | 3000 | 9.30 |
| 2AHPF-20 | 1.22 | 20 | 2900 | 4061 | 500 | 2500 | 9.80 |
| 2AHPF-23 | 1.40 | 23 | 2900 | 4061 | 500 | 2500 | 10.25 |
| 2AHPF-25 | 1.52 | 25 | 2900 | 4061 | 500 | 2000 | 10.50 |

## Installation Data

| Model | L | | L1 | | Ports | |
|---|---|---|---|---|---|---|
| | in | cm | in | cm | In | Out |
| 2AHPF-4 | 3.70 | 9.4 | 1.69 | 4.3 | SAE-12 | SAE-10 |
| 2AHPF-6 | 3.87 | 9.8 | 1.77 | 4.5 | SAE-12 | SAE-10 |
| 2AHPF-8 | 3.95 | 10.0 | 1.85 | 4.7 | SAE-12 | SAE-10 |
| 2AHPF-10 | 4.12 | 10.5 | 1.89 | 4.8 | SAE-12 | SAE-10 |
| 2AHPF-12 | 4.25 | 10.8 | 1.97 | 5.0 | SAE-12 | SAE-10 |
| 2AHPF-14 | 4.35 | 11.0 | 2.00 | 5.1 | SAE-12 | SAE-10 |
| 2AHPF-16 | 4.50 | 11.4 | 2.07 | 5.3 | SAE-12 | SAE-10 |
| 2AHPF-18 | 4.60 | 12.0 | 2.20 | 5.6 | SAE-12 | SAE-10 |
| 2AHPF-20 | 5.72 | 12.8 | 2.36 | 6.0 | SAE-12 | SAE-10 |
| 2AHPF-23 | 4.84 | 13.6 | 2.52 | 6.4 | SAE-16 | SAE-12 |
| 2AHPF-25 | 5.05 | 14.7 | 2.87 | 7.3 | SAE-16 | SAE-12 |

P02

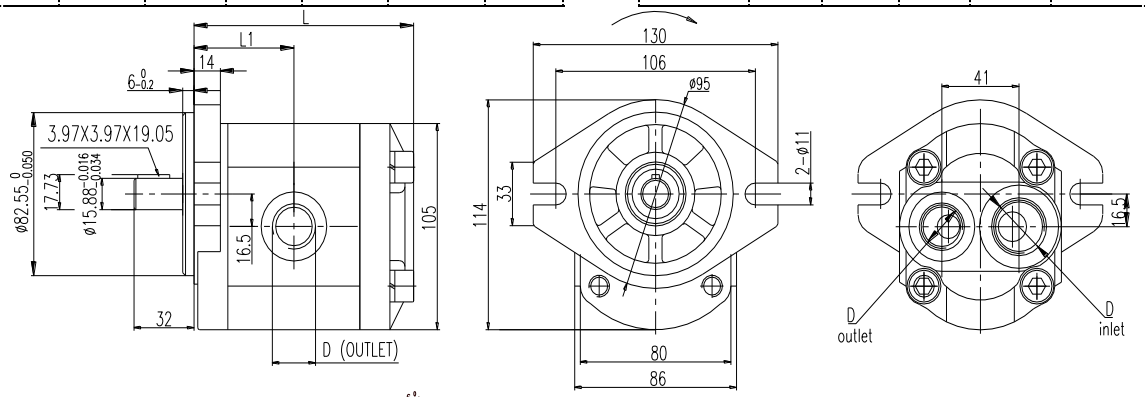


S03

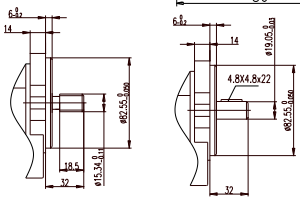

P03

| Spline parameter | |
|---|---|
| DP | 16/32 |
| Z | 9 |
| αD | 30° |

| Ordering Example: | Category + Group | Displacement | Port Combo | Drive Shaft | Rotation | Port | Options |
|---|---|---|---|---|---|---|---|
| | 2AHPF | 4 | LJ36 | P02 | L | SS | |

| Category + Group | Displacement | Port Combo | Drive Shaft | Rotation | Port | Options |
|---|---|---|---|---|---|---|
| Pump:2AHPF<br>Motor:2AHMF | 4/6/8/10/12/14<br>16/18/20/23/25 | LJ39= -12-10<br>LJ36= -10-10<br>LJ40= -12-12 | P02=5/8"KEYED<br>P03=3/4"KEYED<br>S03=9T SPLINE<br>S02=11T SPLINE | L=CCW<br>R=CW<br>B=Bi Ro | SS=SIDE PORT<br>BB=REAR PORT | |

# Group 2 Gear Pumps and Motors "Z11/Z17"

Constructed of an aluminum center section and cast iron end plates ,model 2APF is a high pressure hydraulic gear Pumps and Motor with 11 displacement sizes from 0.24-1.52in³/rev(4-25cm³/rev). The standard mounting flange is a European - 4 bolt. Standard drive shaft is a Taper shaft with 1:5. Additional shaft options are available as outlined in the Ordering Example.

## Recommended Working Conditions

FILTRATION:25 micron or better
INLET PRESSURE:12-32 psi absolute
AMBIENT TEMP:-22°-55°C(-8°-130°F)
OIL VISCOSITY:6-200 cSt
OIL TEMP:-25°-80°C(-12°-175°F)

Flow Rate (gpm) = Displacement(in³/rev) X Speed（rpm）/231
Volumetric efficiency ≥93%

## Technical Specifications

| Model | Displacement | | Pressure | | Speed | | Weight |
|---|---|---|---|---|---|---|---|
| | in^3/rev | cm^3/rev | Cont. | Peak | Min.RPM | Max.RPM | Kg |
| 2APF-4 | 0.24 | 4 | 2900 | 3625 | 600 | 4000 | 3.54 |
| 2APF-6 | 0.36 | 6 | 2900 | 3625 | 600 | 4000 | 3.65 |
| 2APF-8 | 0.48 | 8 | 2900 | 4061 | 600 | 4000 | 3.74 |
| 2APF-10 | 0.61 | 10 | 2900 | 4061 | 600 | 3500 | 3.76 |
| 2APF-12 | 0.73 | 12 | 2900 | 4061 | 600 | 3500 | 3.88 |
| 2APF-14 | 0.85 | 14 | 2900 | 4061 | 600 | 3500 | 3.95 |
| 2APF-16 | 0.97 | 16 | 2900 | 4061 | 600 | 3000 | 4.01 |
| 2APF-18 | 1.09 | 18 | 2900 | 4061 | 600 | 3000 | 4.22 |
| 2APF-20 | 1.22 | 20 | 2900 | 4061 | 500 | 2500 | 4.45 |
| 2APF-23 | 1.40 | 23 | 2900 | 4061 | 500 | 2500 | 4.65 |
| 2APF-25 | 1.52 | 25 | 2900 | 4061 | 500 | 2000 | 4.76 |

## Installation Data

| Model | L | | L1 | | Ports | |
|---|---|---|---|---|---|---|
| | in | cm | in | cm | In | Out |
| 2APF-4 | 3.74 | 9.5 | 1.69 | 4.3 | 40-M6-20 | 35-M6-15 |
| 2APF-6 | 3.90 | 9.9 | 1.77 | 4.5 | 40-M6-20 | 35-M6-15 |
| 2APF-8 | 4.01 | 10.2 | 1.85 | 4.7 | 40-M6-20 | 35-M6-15 |
| 2APF-10 | 4.12 | 10.5 | 1.89 | 4.8 | 40-M6-20 | 35-M6-15 |
| 2APF-12 | 4.25 | 10.8 | 1.97 | 5.0 | 40-M6-20 | 35-M6-15 |
| 2APF-14 | 4.37 | 11.1 | 2.00 | 5.1 | 40-M6-20 | 35-M6-15 |
| 2APF-16 | 4.49 | 11.4 | 2.07 | 5.3 | 40-M6-20 | 35-M6-15 |
| 2APF-18 | 4.60 | 11.7 | 2.13 | 5.4 | 40-M6-20 | 35-M6-15 |
| 2APF-20 | 4.76 | 12.1 | 2.20 | 5.6 | 40-M6-20 | 35-M6-15 |
| 2APF-23 | 4.92 | 12.5 | 2.28 | 5.8 | 40-M6-20 | 35-M6-15 |
| 2APF-25 | 5.00 | 12.7 | 2.36 | 6.0 | 40-M6-20 | 35-M6-15 |

Z17

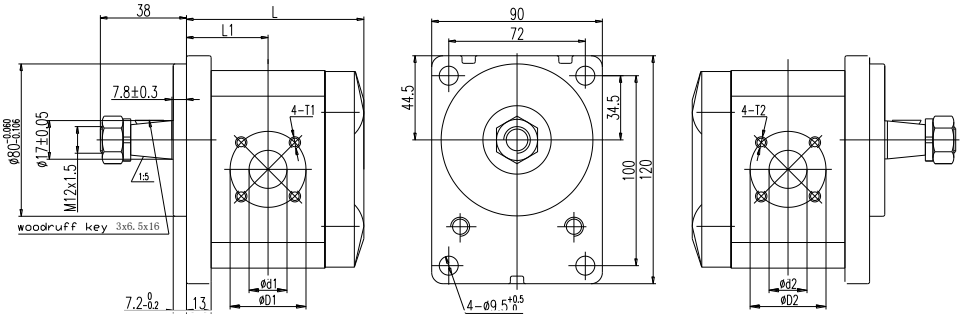


Z11

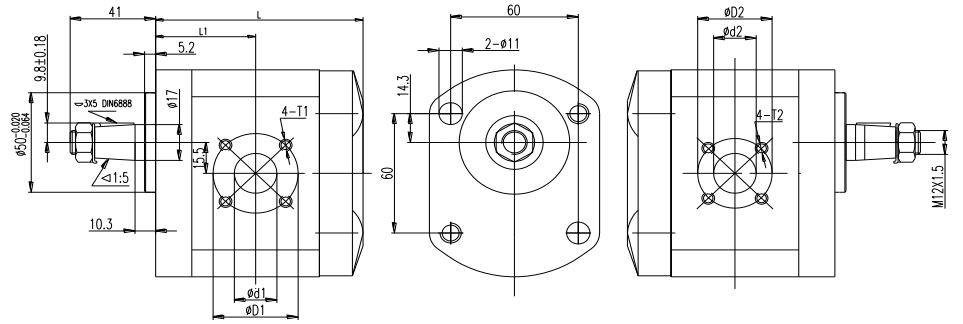


| | Category + Group | Displacement | Port Combo | Drive Shaft | Rotation | Port | Options |
|---|---|---|---|---|---|---|---|
| Ordering Example: | 2APF | 4 | F52 | Z17 | L | SS | |

| Category + Group | Displacement | Port Combo | Drive Shaft | Rotation | Port | Options |
|---|---|---|---|---|---|---|
| Pump:2APF<br>Motor:2AMF | 4/6/8/10/12/14<br>16/18/20/23/25 | F52=40-M6-20/35-M6-15 | Z17=Germany shaft 1:5<br>Z11=Through 2 bolt 1:5 | L=CCW<br>R=CW<br>B=Bi Ro | SS=SIDE PORT<br>BB=REAR PORT | |

# Group 2 Gear Pumps and Motors "Z03"

Constructed of an aluminum center section and cast iron end plates ,model 2APF is a high pressure hydraulic gear Pumps and Motor with 11 displacement sizes from 0.24-1.52in³/rev(4-25cm³/rev). The standard mounting flange is a European - 4 bolt. Standard drive shaft is a taper shaft with 1:8. Additional shaft options are available as outlined in the Ordering Example.

## Recommended Working Conditions

FILTRATION:25 micron or better
INLET PRESSURE:12-32 psi absolute
AMBIENT TEMP:-22°-55°C(-8°-130°F)
OIL VISCOSITY:6-200 cSt
OIL TEMP:-25°-80°C(-12°-175°F)

Flow Rate (gpm) = Displacement(in³/rev) X Speed（rpm）/231
Volumetric efficiency ≥93%

## Technical Specifications

| Model | Displacement | | Pressure | | Speed | | Weight |
|---|---|---|---|---|---|---|---|
| | in^3/rev | cm^3/rev | Cont. | Peak | Min.RPM | Max.RPM | Kg |
| 2APF-4 | 0.24 | 4 | 2900 | 3625 | 600 | 4000 | 3.54 |
| 2APF-6 | 0.36 | 6 | 2900 | 3625 | 600 | 4000 | 3.65 |
| 2APF-8 | 0.48 | 8 | 2900 | 4061 | 600 | 4000 | 3.74 |
| 2APF-10 | 0.61 | 10 | 2900 | 4061 | 600 | 3500 | 3.76 |
| 2APF-12 | 0.73 | 12 | 2900 | 4061 | 600 | 3500 | 3.88 |
| 2APF-14 | 0.85 | 14 | 2900 | 4061 | 600 | 3500 | 3.95 |
| 2APF-16 | 0.97 | 16 | 2900 | 4061 | 600 | 3000 | 4.01 |
| 2APF-18 | 1.09 | 18 | 2900 | 4061 | 600 | 3000 | 4.22 |
| 2APF-20 | 1.22 | 20 | 2900 | 4061 | 500 | 2500 | 4.45 |
| 2APF-23 | 1.40 | 23 | 2900 | 4061 | 500 | 2500 | 4.65 |
| 2APF-25 | 1.52 | 25 | 2900 | 4061 | 500 | 2000 | 4.76 |

## Installation Data

| Model | L | | L1 | | Ports | |
|---|---|---|---|---|---|---|
| | in | cm | in | cm | In | Out |
| 2APF-4 | 3.74 | 9.5 | 1.69 | 4.3 | 40-M6-20 | 35-M6-15 |
| 2APF-6 | 3.90 | 9.9 | 1.77 | 4.5 | 40-M6-20 | 35-M6-15 |
| 2APF-8 | 4.01 | 10.2 | 1.85 | 4.7 | 40-M6-20 | 35-M6-15 |
| 2APF-10 | 4.12 | 10.5 | 1.89 | 4.8 | 40-M6-20 | 35-M6-15 |
| 2APF-12 | 4.25 | 10.8 | 1.97 | 5.0 | 40-M6-20 | 35-M6-15 |
| 2APF-14 | 4.37 | 11.1 | 2.00 | 5.1 | 40-M6-20 | 35-M6-15 |
| 2APF-16 | 4.49 | 11.4 | 2.07 | 5.3 | 40-M6-20 | 35-M6-15 |
| 2APF-18 | 4.60 | 11.7 | 2.13 | 5.4 | 40-M6-20 | 35-M6-15 |
| 2APF-20 | 4.76 | 12.1 | 2.20 | 5.6 | 40-M6-20 | 35-M6-15 |
| 2APF-23 | 4.92 | 12.5 | 2.28 | 5.8 | 40-M6-20 | 35-M6-15 |
| 2APF-25 | 5.00 | 12.7 | 2.36 | 6.0 | 40-M6-20 | 35-M6-15 |

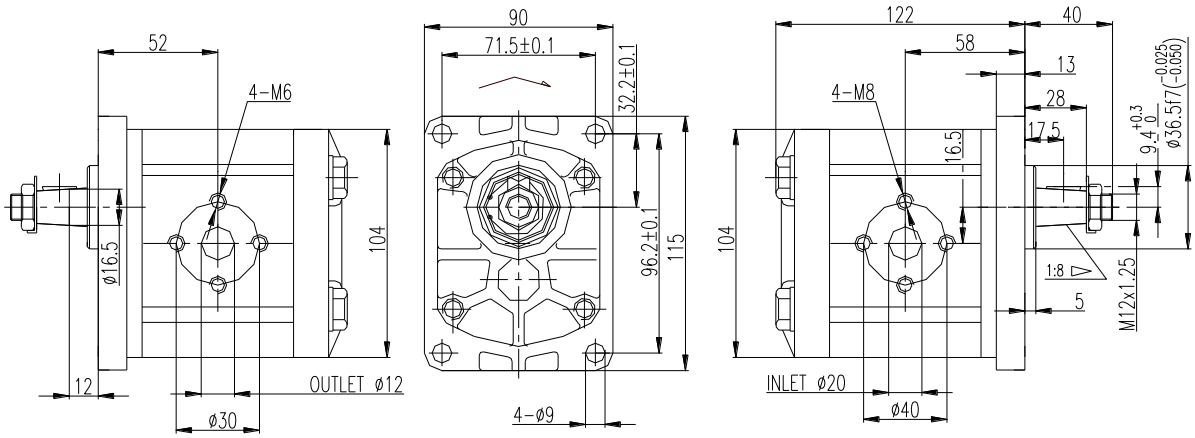


Z03

| | Category + Group | Displacement | Port Combo | Drive Shaft | Rotation | Port | Options |
|---|---|---|---|---|---|---|---|
| Ordering Example: | 2APF | 4 | F52 | Z03 | L | SS | |

| Category + Group | Displacement | Port Combo | Drive Shaft | Rotation | Port | Options |
|---|---|---|---|---|---|---|
| Pump:2APF<br>Motor:2AMF | 4/6/8/10/12/14<br>16/18/20/23/25 | F52=40-M6<br>-20/35-M6-<br>15 | Z03=Eur shaft<br>1:8 | L=CCW<br>R=CW<br>B=Bi Ro | SS=SIDE PORT<br>BB=REAR PORT | |

# Group 3 Gear Pumps and Motors "SAE-B"

Constructed of an aluminum center section and cast iron end plates ,model 3APF is a high pressure hydraulic gear Pumps and Motor with 10 displacement sizes from 1.34-5.43in³/rev(22-89cm³/rev). The standard mounting flange is a SAE B - 2 bolt with a 7/8" diameter straight shaft and 1/4" key.

## Recommended Working Conditions

FILTRATION:25 micron or better
INLET PRESSURE:12-32 psi absolute
AMBIENT TEMP:-22°-55°C(-8°-130°F)
OIL VISCOSITY:7-700 cSt
OIL TEMP:-25°-80°C(-12°-175°F)

Flow Rate (gpm) = Displacement(in³/rev) X Speed（rpm）/231
Volumetric efficiency ≥93%

## Technical Specifications

| Model | Displacement | | Pressure | | Speed | | Weight |
|---|---|---|---|---|---|---|---|
| | in^3/rev | cm^3/rev | Cont. | Peak | Min.RPM | Max.RPM | lbs |
| 3APF-22 | 1.34 | 22 | 3625 | 4350 | 500 | 3000 | 19.35 |
| 3APF-26 | 1.57 | 26 | 3625 | 4350 | 500 | 3000 | 19.55 |
| 3APF-34 | 2.07 | 34 | 3625 | 4350 | 500 | 3000 | 20.20 |
| 3APF-39 | 2.38 | 39 | 3625 | 4350 | 500 | 3000 | 20.65 |
| 3APF-43 | 2.62 | 43 | 3625 | 4350 | 500 | 2800 | 20.85 |
| 3APF-51 | 3.11 | 51 | 3625 | 4350 | 500 | 2800 | 21.50 |
| 3APF-60 | 3.84 | 60 | 2900 | 3625 | 500 | 2800 | 22.25 |
| 3APF-70 | 4.27 | 70 | 2900 | 3335 | 500 | 2500 | 22.75 |
| 3APF-78 | 4.76 | 78 | 2900 | 3335 | 500 | 2300 | 23.50 |
| 3APF-89 | 5.43 | 89 | 2610 | 2900 | 500 | 2300 | 25.00 |

## Installation Data

| Model | L | | L1 | | Ports | |
|---|---|---|---|---|---|---|
| | in | cm | in | cm | In | Out |
| 3APF-22 | 5.16 | 13.1 | 2.60 | 6.6 | SAE-16 | SAE-12 |
| 3APF-26 | 5.27 | 13.4 | 2.63 | 6.7 | SAE-16 | SAE-12 |
| 3APF-34 | 5.47 | 13.9 | 2.71 | 6.9 | SAE-16 | SAE-12 |
| 3APF-39 | 5.62 | 14.3 | 2.79 | 7.1 | SAE-16 | SAE-12 |
| 3APF-43 | 5.78 | 14.7 | 2.87 | 7.3 | SAE-16 | SAE-12 |
| 3APF-51 | 5.98 | 15.2 | 2.99 | 7.6 | SAE-16 | SAE-12 |
| 3APF-60 | 6.22 | 15.8 | 3.11 | 7.9 | SAE-16 | SAE-12 |
| 3APF-70 | 6.53 | 16.6 | 3.22 | 8.2 | SAE-20 | SAE-16 |
| 3APF-78 | 6.73 | 17.1 | 3.34 | 8.5 | SAE-20 | SAE-16 |
| 3APF-89 | 6.93 | 17.6 | 3.46 | 8.8 | SAE-20 | SAE-16 |

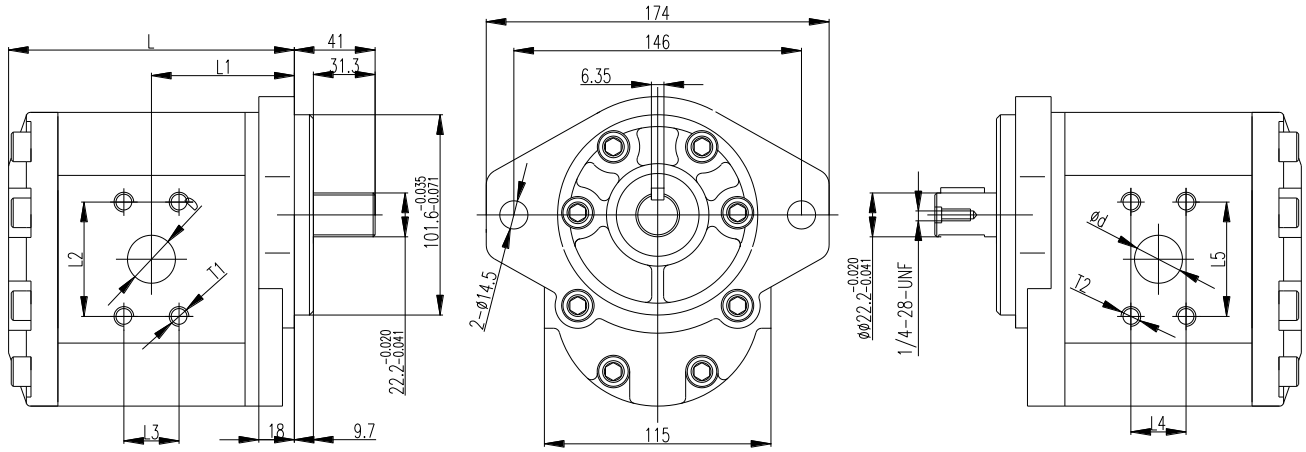


S05

| Spline parameter | |
|---|---|
| DP | 16/32 |
| Z | 13 |
| αD | 30° |

P16

| | Category + Group | Displacement | Port Combo | Drive Shaft | Rotation | Port | Options |
|---|---|---|---|---|---|---|---|
| Ordering Example: | 3APF | 22 | LJ42 | P16 | L | SS | |

| Category + Group | Displacement | Port Combo | Drive Shaft | Rotation | Port | Options |
|---|---|---|---|---|---|---|
| Pump:3APF<br>Motor:3AMF | 22/26/34/39/43<br>51/60/70/78/89 | LJ42= -16-12<br>LJ53= -20-16 | P16=7/8"KEY<br>S05=13T SPLINE | L=CCW<br>R=CW<br>B=Bi Ro | SS=SIDE PORT<br>BB=REAR PORT | |

# Group 3 Gear Pumps and Motors "Z05"

Constructed of an aluminum center section and cast iron end plates ,model 3APF is a high pressure hydraulic gear Pumps and Motor with 10 displacement sizes from 1.34-5.43in³/rev(22-89cm³/rev). The standard mounting flange is a European - 4 bolt with a taper shaft with 1:8.

## Recommended Working Conditions

FILTRATION:25 micron or better
INLET PRESSURE:12-32 psi absolute
AMBIENT TEMP:-22°-55°C(-8°-130°F)
OIL VISCOSITY:7-700 cSt
OIL TEMP:-25°-80°C(-12°-175°F)

Flow Rate (gpm) = Displacement(in³/rev) X Speed（rpm）/231
Volumetric efficiency ≥93%

## Technical Specifications

| Model | Displacement | | Pressure | | Speed | | Weight |
|---|---|---|---|---|---|---|---|
| | in^3/rev | cm^3/rev | Cont. | Peak | Min.RPM | Max.RPM | Kg |
| 3APF-22 | 1.34 | 22 | 3625 | 4350 | 500 | 3000 | 8.78 |
| 3APF-26 | 1.57 | 26 | 3625 | 4350 | 500 | 3000 | 8.87 |
| 3APF-34 | 2.07 | 34 | 3625 | 4350 | 500 | 3000 | 9.16 |
| 3APF-39 | 2.38 | 39 | 3625 | 4350 | 500 | 3000 | 9.37 |
| 3APF-43 | 2.62 | 43 | 3625 | 4350 | 500 | 2800 | 9.46 |
| 3APF-51 | 3.11 | 51 | 3625 | 4350 | 500 | 2800 | 9.75 |
| 3APF-60 | 3.84 | 60 | 2900 | 3625 | 500 | 2800 | 10.09 |
| 3APF-70 | 4.27 | 70 | 2900 | 3335 | 500 | 2500 | 10.32 |
| 3APF-78 | 4.76 | 78 | 2900 | 3335 | 500 | 2300 | 10.66 |
| 3APF-89 | 5.43 | 89 | 2610 | 2900 | 500 | 2300 | 11.34 |

## Installation Data

| Model | L | | L1 | | Ports | |
|---|---|---|---|---|---|---|
| | in | cm | in | cm | In | Out |
| 3APF-22 | 5.06 | 12.85 | 2.60 | 6.5 | 62-M10-33 | 51-M10-27 |
| 3APF-26 | 5.18 | 13.15 | 2.63 | 6.7 | 62-M10-33 | 51-M10-27 |
| 3APF-34 | 5.39 | 13.70 | 2.71 | 6.9 | 62-M10-33 | 51-M10-27 |
| 3APF-39 | 5.55 | 14.10 | 2.79 | 7.1 | 62-M10-33 | 51-M10-27 |
| 3APF-43 | 5.65 | 14.35 | 2.87 | 7.3 | 62-M10-33 | 51-M10-27 |
| 3APF-51 | 5.89 | 14.95 | 2.99 | 7.6 | 62-M10-33 | 51-M10-27 |
| 3APF-60 | 6.14 | 15.60 | 3.11 | 7.9 | 62-M10-33 | 51-M10-27 |
| 3APF-70 | 6.42 | 16.30 | 3.22 | 8.2 | 62-M10-33 | 51-M10-27 |
| 3APF-78 | 6.73 | 17.1 | 3.34 | 8.5 | 62-M10-33 | 51-M10-27 |
| 3APF-89 | 6.93 | 17.6 | 3.46 | 8.8 | 62-M10-33 | 51-M10-27 |

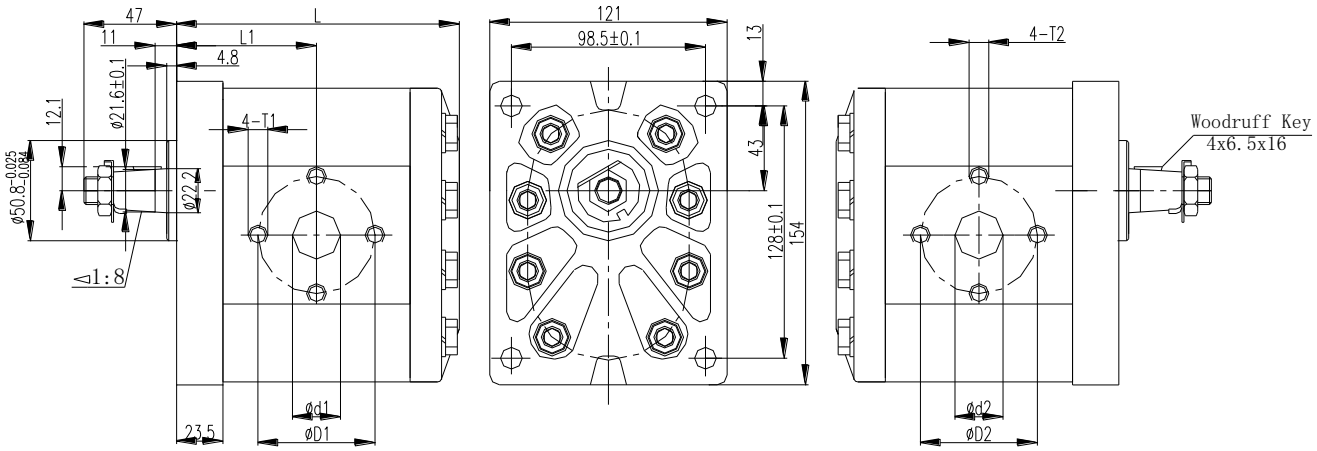


Z05

| Ordering Example: | Category + Group | Displacement | Port Combo | Drive Shaft | Rotation | Port | Options |
|---|---|---|---|---|---|---|---|
| | 3APF | 22 | F12 | Z05 | L | SS | |

| Category + Group | Displacement | Port Combo | Drive Shaft | Rotation | Port | Options |
|---|---|---|---|---|---|---|
| Pump:3APF<br>Motor:3AMF | 22/26/34/39/43<br>51/60/70/78/89 | F12=62-M10-33/51-M10-27 | Z05=Woodruff key 4x6.5x16 1:8 | L=CCW<br>R=CW<br>B=Bi Ro | SS=SIDE PORT<br>BB=REAR PORT | |

# Hydraulic Hi/Lo Gear Pump Model CBT 8-16 GPM

Model CBT is a Hi/Lo hydraulic gear pump with 12 displacement combinations with maximum pressures of 900 psi for the low pressure pump and 3000 psi for the high pressure pump. The change from Lo to Hi pressure is automatic with the Lo pressure preset from 400 to 900 psi (preset at approx.450 psi). Applications for Hi/Lo pumps include log splitters, presses, etc. where rapid movement of the cylinder at low pressure is required prior to automatically switching to the high pressure mode to meet load requirements.

## Recommended Working Conditions

FILTRATION:25 micron or better
INLET PRESSURE:12-32 psi absolute
AMBIENT TEMP:-22°-55°C(-8°-130°F)
OIL VISCOSITY:7-700 cSt
OIL TEMP:-25°-80°C(-12°-175°F)

Flow Rate (gpm) = Displacement(in³/rev) X Speed（rpm）/231
Volumetric efficiency ≥93%

## Technical Specifications

| Model | Flow at 3600 rpm (gpm) | Displacement in³/rev(cm³/rev) | | Pressure psi | | Speed (rpm) | Dimensions | | | Weight (lbs) |
|---|---|---|---|---|---|---|---|---|---|---|
| | | LO | HI | LO | HI | | L | L1 | L2 | |
| CBT-6.3/2.1 | 8 | 0.130(2.1) | 0.385(6.3) | 400/900 | 3000 | 3600 | 6.07" | 3.74" | 2.41" | 8.8 |
| CBT-8.8/3.6 | 11 | 0.189(3.6) | 0.537(8.8) | 400/900 | 3000 | 3600 | 6.61" | 4.24" | 2.74" | 9.8 |
| CBT-10.9/3.6 | 13 | 0.189(3.6) | 0.665(10.9) | 400/900 | 3000 | 3600 | 7.00" | 4.53" | 3.04" | 10.8 |
| CBT-13/4.2 | 16 | 0.256(4.2) | 0.793(13.0) | 400/900 | 3000 | 3600 | 6.70" | 4.37" | 3.04" | 11.5 |

## Installation Data

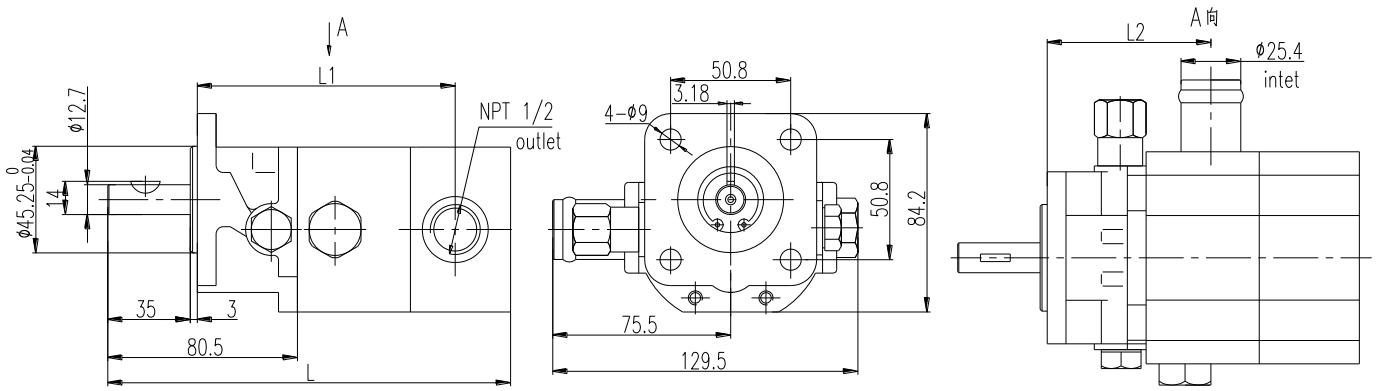


| | Category + Group | Displacement | Options |
|---|---|---|---|
| Ordering Example: | CBT | 6.3/2.1 | C=All Cast |

| Category + Group | Displacement | Options |
|---|---|---|
| CBT | 6.3/2.1=8 GPM<br>8.8/3.6=11 GPM<br>10.9/3.6=13 GPM<br>13.0/4.2=16 GPM | C=All Cast<br>/=All Aluminum |

# Hydraulic Hi/Lo Gear Pump Model CBT 22-28 GPM

Model CBT is a Hi/Lo hydraulic gear pump offers maximum pressures of 900 psi for the low pressure pump and 3000 psi for the high pressure pump. The change from Lo to Hi pressure is automatic with the Lo pressure preset from 400 to 900 psi (preset at approx.850 psi). Applications for Hi/Lo pumps include log splitters, presses, etc. where rapid movement of the cylinder at low pressure is required prior to automatically switching to the high pressure mode to meet load requirements.

## Recommended Working Conditions

FILTRATION:25 micron or better
INLET PRESSURE:12-32 psi absolute
AMBIENT TEMP:-22°-55°C(-8°-130°F)
OIL VISCOSITY:7-700 cSt
OIL TEMP:-25°-80°C(-12°-175°F)

Flow Rate (gpm) = Displacement(in³/rev) X Speed（rpm）/231
Volumetric efficiency ≥93%

## Technical Specifications

| Model | Flow at 3600 rpm (gpm) | Displacement in³/rev(cm³/rev) | | Pressure psi | | Speed (rpm) | Weight (lbs) |
|---|---|---|---|---|---|---|---|
| | | LO | HI | LO | HI | | |
| CBT-15.2/7.6 | 22 | 0.465(7.63) | 0.93(15.26) | 400/900 | 3000 | 3600 | 18.6 |
| CBT-22.9/7.6 | 28 | 0.465(7.63) | 1.395(22.88) | 400/900 | 3000 | 3600 | 19.7 |

## Installation Data

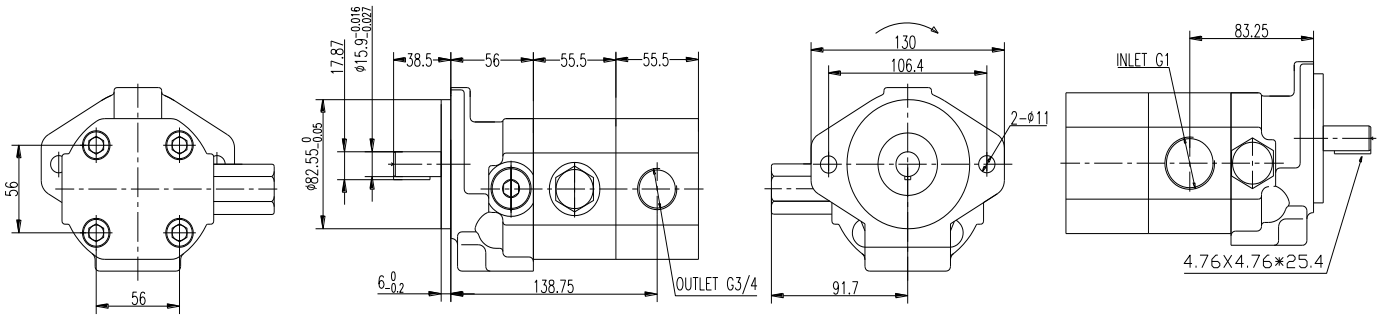


| | Category + Group | Displacement | Options |
|---|---|---|---|
| Ordering Example: | CBT | 15.2/7.6 | C=All Cast |

| Category + Group | Displacement | Options |
|---|---|---|
| CBT | 15.2/7.6=22 GPM<br>22.9/7.6=28 GPM | C=All Cast<br>/=All Aluminum |

# Pressure Compensating Variable LKF Flow Control

Model LKF is a full-range pressure compensating variable flow control. It is designed so that the orifice area varies as the lever is rotated. The outlet flow is smooth and constant regardless of the pressure on the control flow or excess flow ports. An adjustable ball spring relief allows for pressure compensated flow up to the pressure setting on the relief. Relief valves are preset at 1500 psi and field adjustable from 75 to 3000 psi.

## Materials

- Cast Iron Body
- Heat Treated Compensator Spool
- Stainless Steel Rotary Spool
- Buna-N "O" Rings

## Installation Data

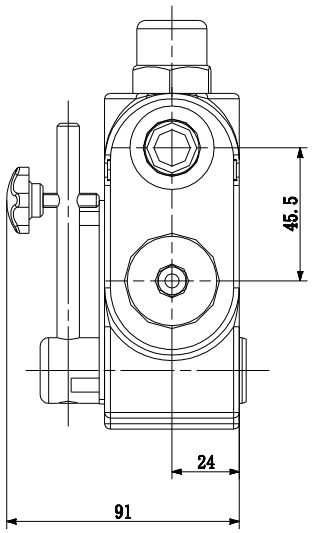


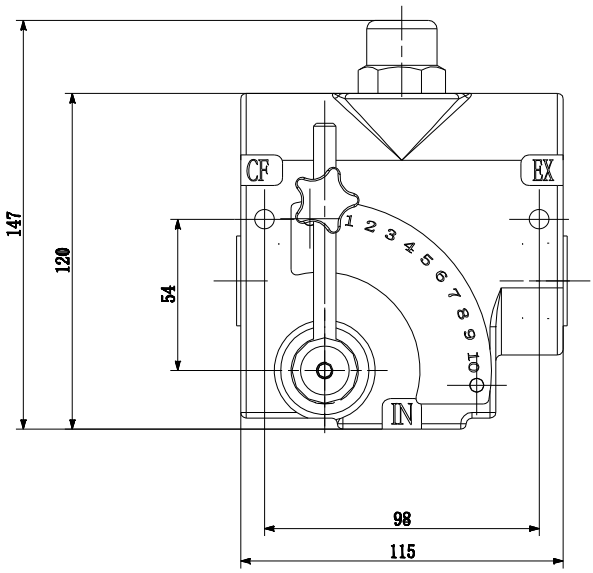


| Model | Oil Port | Flow (gpm) |
|---|---|---|
| LKF-40-3/8NPT | 3/8"-NPT | 0-30 L/MM(0-8gpm) |
| LKF-60-1/2NPT | 1/2"-NPT | 0-60 L/MM(0-16gpm) |
| LKF-114-3/4NPT | 3/4"-NPT | 0-114 L/MM(0-30gpm) |

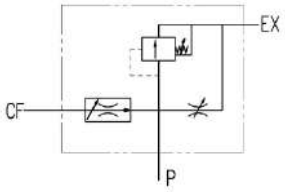


| | Model | Series | Ports |
|---|---|---|---|
| Ordering Example: | LKF | 60 | 3/4-16(-8 SAE) |

| Model | Series | Ports |
|---|---|---|
| LKF | 40 | 9/16-18(-6 SAE)(0-8gpm) |
| | 60 | 3/4-16(-8 SAE)(0-16gpm) |
| | 114 | 7/8-14(-10 SAE)(0-16gpm) |
| | | 1-1/16-12(-12 SAE)(0-32gpm) |

# STANDARD CAPABILITIES GUIDE TO VALVES

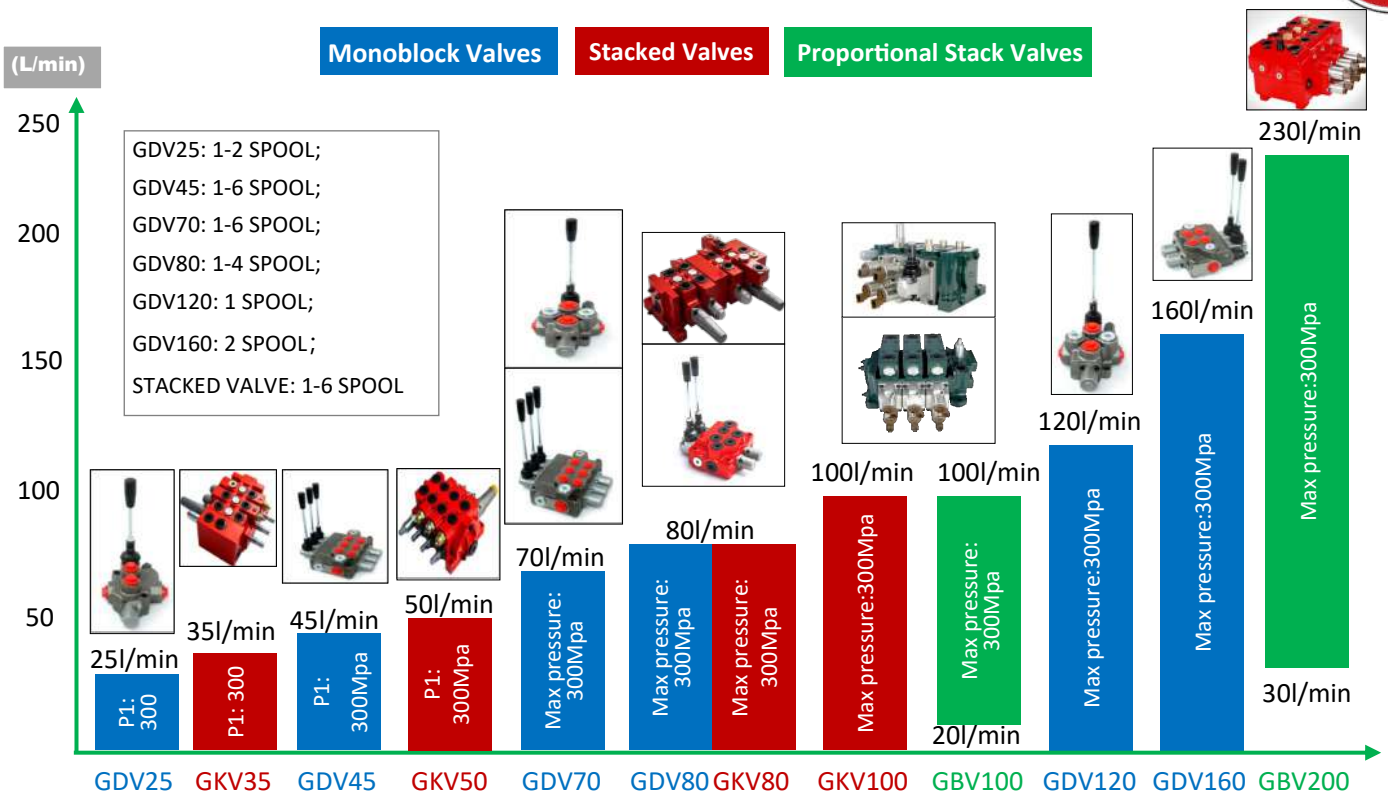


## Sectional Valves

| Pos.1 | 2 | 3 | | 4 | 5 | | 6 | 7 | |
|---|---|---|---|---|---|---|---|---|---|
| Model | Number of section | Inlet section code | | Inlet relief valve settings (bar) | End section code | | First section | Work section code | |
| GKV35<br>GKV50<br>GKV80<br>GKV100<br>GBV100<br>GBV200 | /2<br>/3 | -JK01<br>-JS01 | Inlet section with pilot supply<br>Inlet section with direct acting relief valve | /210 | -DK01<br>-DY1 | End section without T port<br>No oil return port | -O1 | -ZK01<br>-ZK02<br>-ZS01<br>-ZS02<br>-YT01<br>-YT03 | Load relief valves at both at both A and B ports<br>Load relief valve at A port<br>Basic section (no over load relief)<br>Overload relief valves on both A and B ports<br>Standard Section Without over load relief valves at both A and B ports<br>One over load relief valve on A port |

| 8 | | 9 | | 10 | 11 | 12 | | 13 | | 14 | | 15 | |
|---|---|---|---|---|---|---|---|---|---|---|---|---|---|
| Drive style code | | Spool function code | | 12VDC or 24VDC Ignored, if not electrical | Desired flow rate (L/min) | (Handle bracket code) | | (Handle code) | | Load relief valve style | | Second section | ... |
| -KQ1<br>-KQ2<br>-KQ5 | Standard manually controlled<br>Hydraulic remote<br>Electrical actuated (on/off) | -FG1<br>-FG2<br>-FG3 | 3 positon 4 way At neutral: P,T,A,B are all blocked<br>3 positon 4 way At neutral: P blocked, T,A,B connected<br>3 positon 4 way At neutral: P,A,B and T all connected | -DC/12<br>-DC/24 | -QL/30<br>-QL/40<br>-QL/50<br>-QL/80<br>-QL/100 | -SL0<br>-SL1 | Valve without handle bracket<br>On the sample | -SB0<br>-SB1 | No Handle<br>On the sample | -RF1<br>-RF2<br>-RF3 | Relief valve with anti-cavitation function<br>Direct acting relief valve<br>Differential pressure relief valve | -O2 | |

## Monoblock Valves

| Pos.1 | 2 | 3 | | 4 | 5 | | 6 | | 7 | 8 | |
|---|---|---|---|---|---|---|---|---|---|---|---|
| Model | Number of spools | Inlet port code | | inlet relief setting | Return port code | | Power beyond | | First spool | Spool function | |
| GDV25<br>GDV45<br>GDV70<br>GDV80<br>GDV120<br>GDV160 | -3 | -P1 | Port on top | /210 | -T1 | T at the front | -D0<br>-D1 | Without Power Beyond<br>T port at the top, power beyond port connector at front | -O1 | -FG1<br>-FG2 | 3 positon 4 way At neutral: P,T,A,B are all blocked<br>3 positon 4 way At neutral: P blocked, T,A,B connected |

| 9 | | 10 | 11 | 12 | 13 | |
|---|---|---|---|---|---|---|
| Drive code | | 12 or 24VDC Ignored, if not electrical | Relief settings of the over load relief at A port (bar) If no relief, Input for pressure | Relief settings of the over load relief at B port (bar)If no relief, Input for pressure | Second spool | ... |
| -KQ1<br>-KQ2<br>-KQ5 | Standard manually controlled<br>Hydraulic remote<br>Electrical actuated (on/off) | -DC/00<br>-DC/24 | -AR/000<br>-AR/220<br>-AR/250 | -BR/000<br>-BR/190 | -O2 | |

# STANDARD CAPABILITIES GUIDE TO ORBIT MOTORS

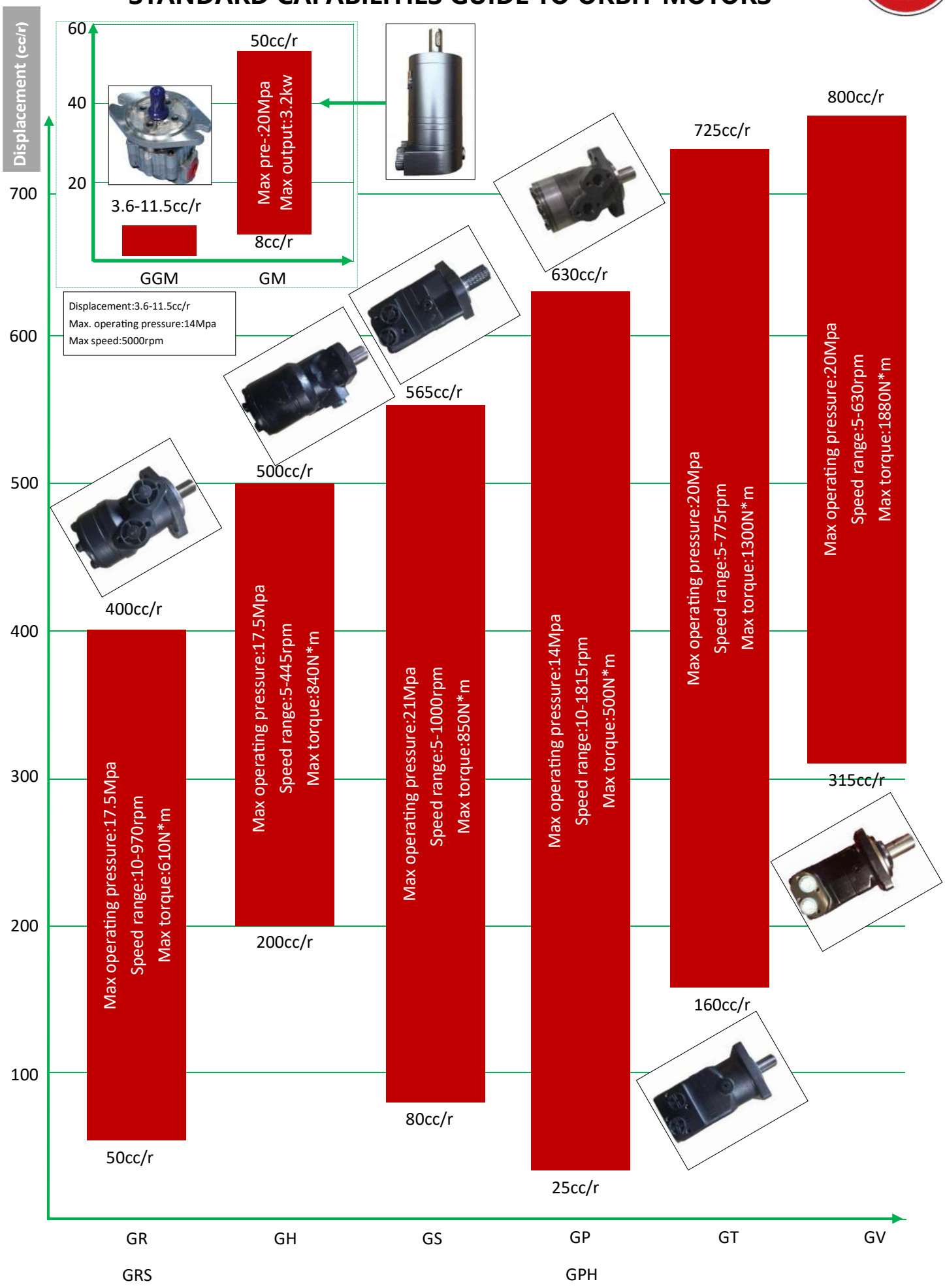

# ORDER CODE

| Series | Disp. | Flange | | Shaft | | Ports | | Rotation | | Paint | | Function | |
|---|---|---|---|---|---|---|---|---|---|---|---|---|---|
| GR<br>GP | 025<br>032<br>040<br>050<br>080<br>100<br>125<br>160<br>200<br>250<br>315<br>400<br>500<br>630 | A2<br>A4<br>H4<br>H5 | 2-Hole SAE A Flange ,Pilot Φ82.5x8<br>4-Hole SAE A Flange ,Pilot Φ82.5x8<br>4-3/8-16 Hole Square Flange ,Pilot Φ44.4x2.8<br>4-M10 Hole Square Flange ,Pilot Φ44.4x2.8 | S1<br>S2<br>S3<br>S4<br>S5<br>R1<br>R2<br>R3<br>T1<br>T2 | Shaft Φ25,parallel key 8x7x32<br>Shaft Φ25.4,parallel key 6.35x6.35x31.75<br>Short Shaft Φ25.4,parallel key 6.35x6.35x31.75<br>Shaft Φ32,parallel key 10x8x45<br>Shaft Φ31.75,parallel key 7.96x7.96x31.75<br>Shaft Φ25.4,splined tooth SAE 6B<br>Shaft Φ25.4,splined tooth 14-DP12/24<br>Long Shaft Φ25.4,splined tooth 14-DP12/24<br>Tapered shaft Φ28.56,parallel key B5x5x14<br>Tapered shaft Φ31.75,parallel key 7.96x7.96x25.4 | G1<br>G2<br>U1<br>U2<br>M1 | G1/2 manifold mount 4xM8,G1/4<br>PT(Rc)1/2 manifold 4xM8,PT(Rc)1/4<br>1/2-14NPTF manifold 4x5/16-18UNC,7/16-20UNF<br>7/8-14UNF O-ring manifold 4x5/16-18UNC,7/16-20UNF<br>M22x1.5 manifold mount 4xM8,M14X1.5 | A<br>R | Standard<br>Opposite | A<br>B<br>C<br>S | No paint<br>Blue<br>Black<br>Silver grey | A<br>N<br>D<br>F<br>L | Standard<br>Big radial force<br>No case drain<br>Free running<br>Low speed |
| GRS<br>GPH | 025<br>032<br>040<br>050<br>080<br>100<br>125<br>160<br>200<br>250<br>315<br>400<br>500<br>630 | A2<br>A4<br>H4<br>H5<br>A1<br>A3 | 2-Hole SAE A Flange ,Pilot Φ82.5x8<br>4-Hole SAE A Flange ,Pilot Φ82.5x8<br>4-3/8-16 Hole Square Flange ,Pilot Φ44.4x2.8<br>4-M10 Hole Square Flange ,Pilot Φ44.4x2.8<br>2-Hole SAE A Flange ,Pilot Φ82.5x2.8<br>4-Hole SAE A Flange ,Pilot Φ82.5x2.8 | S6<br>S7<br>S8<br>S9<br>SA<br>SB<br>SC<br>SD<br>R4<br>R5<br>T3 | Shaft Φ25.4,woodruff key Φ25.4x6.35<br>Shaft Φ25.4,parallel key 8x7x32<br>Shaft Φ25.4,parallel key 6.35x6.35x31.75<br>Shaft Φ25.4,pin hole Φ10.3<br>Shaft Φ25.4,pin hole Φ8<br>Shaft Φ22.22,parallel key 6.35x6.35x25.4<br>Shaft Φ25,parallel key 8x7x28<br>Shaft Φ25,parallel key 8x7x32<br>Shaft Φ25.4,splined tooth SAE 6B<br>Shaft Φ22.22,splined tooth 13-DP16/32<br>Tapered shaft Φ25.4,woodruff key Φ25.4x6.35 | G7<br>G8<br>D1<br>D2<br>U3<br>U9<br>UA<br>M2<br>M3<br>M4 | G1/2,G1/4<br>PT(Rc)1/2,PT(Rc)1/4<br>Φ10 O-ring manifold 4x5/16-18UNC,7/16-20UNF<br>Φ10 O-ring manifold 4xM8,G1/4<br>3/4-16 O-ring,7/16-20UNF<br>7/8-14UNF O-ring,7/16-20UNF<br>1/2-14NPTF,7/16-20UNF<br>M18x1.5,M10x1<br>M20x1.5,M10x1<br>M22x1.5,M10x1 | A<br>R | Standard<br>Opposite | A<br>B<br>C<br>S | No paint<br>Blue<br>Black<br>Silver grey | A<br>N<br>D<br>F<br>L | Standard<br>Big radial force<br>No case drain<br>Free running<br>Low speed |
| GH | 200<br>250<br>315<br>400<br>500 | A5<br>A6 | 2-Φ13.5 SAE A Flange ,Pilot Φ82.5x6<br>4-Φ13.5 SAE A Flange ,Pilot Φ82.5x6 | S4<br>SF<br>SG<br>SH<br>R3<br>R4<br>R6<br>T4 | Shaft Φ32,parallel key 10x8x45<br>Shaft Φ35,parallel key 10x8x45<br>Shaft Φ31.75,parallel key 7.96x7.96x31.75<br>Shaft Φ35,parallel key 10x8x45<br>Shaft Φ31.75,splined tooth 14-DP12/24<br>Shaft Φ25.4,parallel key SAE 6B<br>Long Shaft Φ31.75,splined tooth 14-DP12/24<br>Tapered Shaft Φ35,parallel key B6x6x20 | G1<br>G2<br>U1<br>U2<br>M1 | G1/2 manifold mount 4xM8,G1/4<br>PT(Rc)1/2 manifold 4xM8,PT(Rc)1/4<br>1/2-14NPTF manifold 4x5/16-18UNC,7/16-20UNF<br>7/8-14UNF O-ring manifold 4x5/16-18UNC,7/16-20UNF<br>M22x1.5 manifold mount 4xM8,M14X1.5 | A<br>R | Standard<br>Opposite | A<br>B<br>C<br>S | No paint<br>Blue<br>Black<br>Silver grey | A<br>N<br>D<br>F<br>L | Standard<br>Big radial force<br>No case drain<br>Free running<br>Low speed |

—www.grhpower.com —

# ORDER CODE

| Series | Disp. | Flange | | Shaft | | Ports | | Rotation | | Paint | | Function | |
|---|---|---|---|---|---|---|---|---|---|---|---|---|---|
| GS | 080<br>100<br>125<br>160<br>200<br>250<br>315<br>400<br>475<br>525<br>565 | A7<br>A9<br>AA<br>B1<br>W1<br>H1<br>H2<br>H3 | 2-Φ13.5 rhomb flange Φ106.4,pilot Φ82.5x6.3<br>6-Φ13.5 rhomb flange Φ106.4,pilot Φ82.5x2.6<br>2-Φ14.3 rhomb flange Φ146.05,pilot Φ101.6x9.4<br>4-Φ11 circle flange Φ125,pilot Φ100x6<br>4-Φ13.5 wheel flange Φ160,pilot Φ125x8<br>4-Φ11.5 square flange Φ106.4,pilot Φ82.5x6.3<br>4-Φ13.5 square flange Φ127,pilot Φ101.6x6.3<br>4-Φ13.5 rhomb flange Φ106.4,pilot Φ82.5x6.3 | C1<br>S4<br>S8<br>SG<br>R2<br>R3<br>R7<br>T4<br>T5<br>R8<br>R5 | Cardan shaft 12-DP12/24<br>Shaft Φ32,parallel key 10x8x45<br>Shaft Φ25.4,parallel key 6.35x6.35x25.4<br>Shaft Φ31.75,parallel key 7.96x7.96x31.75<br>Shaft Φ31.75,splined tooth 14-DP12/24<br>Long Shaft Φ31.75,splined tooth 14-DP12/25<br>Shaft Φ34.85,splined tooth 6-34.85x28.14x8.64<br>Tapered Shaft Φ35,parallel key B6x6x20<br>Tapered Shaft Φ31.75,parallel key 7.96x7.96x31.75<br>Shaft Φ25.4 parallel key SAE 6B<br>Shaft Φ22 splined tooth 13-DP16/32 | G9<br>M8<br>UB<br>UC | G1/2 manifold mount 2xM10,G1/4<br>M22x1.5 manifold mount 2xM10,M14x1.5<br>7/8-14UNF O-ring manifold 2x3/8-16UNC,7/16-20UNF<br>1/2-14NPTF O-ring manifold 2x3/8-16UNC,7/16-20UNF | A<br>R | Standard<br>Opposite | A<br>B<br>C<br>S | No paint<br>Blue<br>Black<br>Silver grey | A<br>F<br>L | Standard<br>Free running<br>Low speed |
| GT | 160<br>200<br>250<br>315<br>400<br>500<br>630<br>725 | H6<br>H7<br>W2<br>B2<br>H8 | 4-Φ14 square flange Φ160,pilot Φ125x9<br>4-Φ14.5 square flange Φ162,pilot Φ127x9<br>4-Φ18 wheel flange Φ200,pilot Φ160x7<br>4-Φ14 circle flange Φ160,pilot Φ125x8<br>4-Φ14.5 square flange Φ162,pilot Φ127x10 | C2<br>SK<br>SL<br>R9<br>RA<br>T6<br>T7<br>SM | Cardan shaft 16-DP12/24<br>Shaft Φ40,parallel key 12x8x70<br>Shaft Φ38.1,parallel key 9.53x9.53x57.15<br>Shaft Φ38.1,splined tooth 17-DP12/24<br>Shaft Φ38.1,splined tooth 17-DP12/25<br>Tapered shaft 1:10 Φ45,parallel key B12x8x28<br>Tapered shaft 1:8 Φ45,parallel key 11.13x11.13x31.75<br>Shaft Φ31.75,parallel key 7.96x7.96x40 | G3<br>M5<br>U4<br>U5<br>G4<br>M9 | G3/4 manifold mount 4xM10,G1/4<br>M27x2 manifold mount 4xM10,M14x1.5<br>1-1/16-12UN O-ring,9/16-18UNF<br>1-1/16-12UN O-ring,7/16-20UNF<br>G3/4,G1/4<br>M27x2,M14x1.5 | A<br>R | Standard<br>Opposite | A<br>B<br>C<br>S | No paint<br>Blue<br>Black<br>Silver grey | A<br>F<br>L | Standard<br>Free running<br>Low speed |
| GV | 315<br>400<br>500<br>630<br>800 | H9<br>W3<br>B3 | 4-Φ18 square flange Φ200,pilot Φ160x11<br>4-Φ18 wheel flange Φ224,pilot Φ180x10<br>4-Φ14 circle flange Φ180,pilot Φ140x8 | C3<br>SN<br>RB<br>RC<br>SP<br>T8<br>T9 | Cardan shaft 16-DP10/20<br>Shaft Φ50,parallel key 14x9x70<br>Shaft Φ53.975,splined tooth 16-DP8/16<br>Shaft Φ53.975,splined tooth 16-DP8/16<br>Shaft Φ57.15,parallel key 12.7x12.7x57.15<br>Tapered Shaft Φ60,parallel key 16x10x32<br>Tapered Shaft Φ60,parallel key 14.308x14.308x50.8 | G5<br>M6<br>U6<br>G6<br>M7<br>U7 | G1 manifold 4xM12,G1/4<br>M33x2 manifold 4xM12,M14x1.5<br>1-5/16-12UN O-ring,9/16-18UNF<br>G1,G1/4<br>M33x2,M14x1.5<br>1-5/16-12UN O-ring,7/16-20UNF | A<br>R | Standard<br>Opposite | A<br>B<br>C<br>S | No paint<br>Blue<br>Black<br>Silver grey | A | Standard |
| GGM | 3.6<br>6.1<br>7.4<br>9.5<br>11.5 | AB<br>HA<br>AC | 2-Φ10.4 rhomb flange Φ82.55,pilot Φ50.8x3.1<br>4-Φ10 square flange 50.8x50.8,pilot Φ45.2x3.1<br>2-Φ11.2 rhomb flange Φ106.4,pilot Φ82.55x3.1 | SQ<br>RD<br>RF<br>SR<br>RG | 9/16 Dia. keyed shaft<br>9/16 Dia. 8 tooth spline long shaft<br>5/8 Dia. 9 tooth spline shaft<br>7/16 Dia. Keyed shaft<br>9/16 Dia. 8 tooth spline shaft | A<br>B | Rear<br>Side | A<br>R | Standard<br>Opposite | A | No paint | A<br>B | Standard seal<br>Standard seal w/dust seal |

—www.grhpower.com —

# STANDARD CAPABILITIES GUIDE TO POWER UNIT

GRH has developed and manufactured hundreds of hydraulic power packs. Here are some commonly used power packs. If there are special product requirements, please let GRH engineer design customization for you.

## ORDER CODE

| Pos.1 | | 2 | 3 | 4 | | 5 | 6 | 7 | 8 | 9 | 10 | | 11 | |
|---|---|---|---|---|---|---|---|---|---|---|---|---|---|---|
| Motor | | Hydraulic System | Disp.(cc/r) | System Pressure | | Motor Power (kw) | Motor Voltage (V) | Motor Speed (RPM) | Solenoid Valve Voltage (V) | Tank Cap. (L) | Installation | | Port Size | |
| DC-<br>AC-<br>A- | DC motor<br>Three-phase AC motor<br>Single-phase AC motor | Fxx- | 0.25/<br>0.5/<br>0.75/<br>1.6/<br>2/<br>2.5/<br>3/<br>3.5/<br>4/<br>5/ | D-<br>E-<br>F-<br>G-<br>H- | 100bar<br>160bar<br>200bar<br>250bar<br>315bar | xx/ | 24/ | xx/ | 12-<br>24- | 4<br>5<br>6<br>8<br>10<br>12 | H-<br>HS-<br>V-<br>T- | Horizontal<br>Side horizontal<br>Vertical<br>Particular | A<br>B<br>C<br>D<br>E<br>F | M14x1.5<br>M16x1.5<br>G1/4<br>G3/8<br>NPT3/8<br>9/16"SAE |

# TECHNICAL PARAMETERS

| | Model | Disp. (cc/r) | Tank Cap. (L) | Pressure (Mpa) | Motor Power (KW) | Voltage (V) | |
|---|---|---|---|---|---|---|---|
| Power Unit for Vehicle Lift | AC-F5-2.1(2.7)/F-2.2/220 (380)/2850/xx-10(12)V-D | 2.1-2.7 | 10-12 | 18-20 | 2.2 | AC220 (380) | 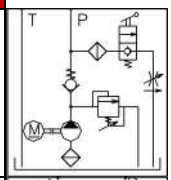 |
| Power Unit for Hydraulic Scissorlift | AC-F9-2.1/F(G,H)-2.2(3.0)/220 (380)/2850/xx-20V-C | 2.1 | 20 | 20-28 | 2.2(3.0) | AC220 (380) | 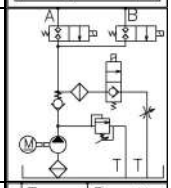 |
| Power Unit for Aerial Work Platforms | AC-F11-1.1/F-1.5/220/2850/xx-6H-C | 1.1 | 6 | 18 | 1.5 | AC220 | 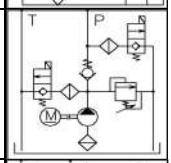 |
| Power Unit for Semi-electric Stacker | DC-F6-1.6(2.1,2.6)/F-1.6(2.2)/12 (24)/2500/xx-5(6,8)HS-D | 1.6-2.6 | 5-8 | 20 | 1.6(2.2) | DC12 (24) | 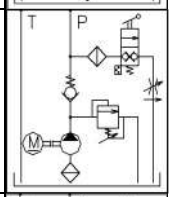 |
| Power Unit for All-electric Forklift Truck | DC-F10S-1.6(2.6)/F-1.6(2.2)/12 (24)/2500/xx-7V-D | 1.6-2.6 | 7 | 20 | 1.6(2.2) | DC12 (24) | 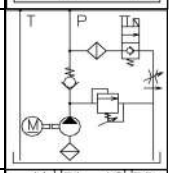 |
| Power Unit for Van Truck | DC-F39-2.5/E-2/24/2800/xx-8H-A | 2.5 | 8 | 14 | 2 | DC24 | 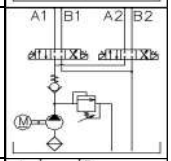 |
| Power Unit for Automobile Tail Plate | DC-F15-2.1/F-2.0(2.2)/12(24)/2500/ xx-9H-A | 2.1 | 9 | 20 | 2.0(2.2) | DC12 (24) | 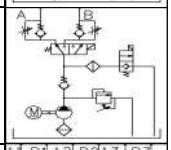 |
| Power Unit for Tyre Press | AC-F40-3.2(4.2)/F-1.5 (2.2)/380/1440/xx-6H-C | 3.2-4.2 | 6 | 18-20 | 1.5(2.2) | AC380 | 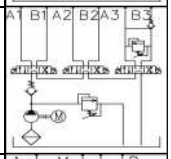 |
| Power Unit for Dock Leveler | AC-F32-3.2/E-1.5/380/1440/xx-6H-C | 3.2 | 6 | 16 | 1.5 | AC380 | 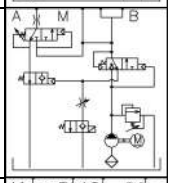 |
| Power Unit for Snow Removal Truck | DC-F36-1.6/F-1.6/12/2500/xx-5H-C | 1.6 | 5 | 20 | 1.6 | DC12 | 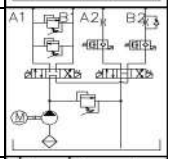 |
| Power Unit for Pallet Truck | DC-F10-0.5(0.75)/E-0.8/12 (24)/3650/xx-1(1.2,1.7)H-C | 0.5-0.75 | 1.0-1.7 | 16 | 0.8 | DC12 (24) | 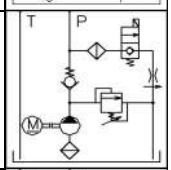 |
| Micro Power Unit for Medical Equipment | DC-F02-0.25(0.5)/D-0.5/24/2000/xx -1H-C | 0.25-0.5 | 1 | 6.5-10 | 0.5 | DC24 | 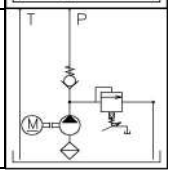 |

GRH Specialize to Work in Hydraulic Field Over 30 Years

TS16949 and ISO14000 are GRH Guiding Principles

国瑞液压专注于液压领域，超过三十年设计及制造经验

TS16949和ISO14000的标准是GRH遵守的程序化准则

江苏国瑞液压机械有限公司

JIANGSU GUORUI HYDRAULIC MACHINERY CO.LTD

江苏省建湖县高新区双湖西路666号

No.666 West Shuanghu Road Hi-tech Zone

Jianhu Jiangsu China

电话/Tel:400-630-3018

邮编/P.C:224700

Http://www.grhpower.com

Email: grh@grhcn.com

上海国瑞液压科技有限公司

SHANGHAI GUORUI HYDRAULIC TECHNOLOGY CO.LTD

上海市虹口区四川北路1717号2201室

RM 2201 JiaJie Building No 1717 North Sichuan Road Shanghai China

电话/Tel:86-21-6218 3268

邮编/P.C:200080

Http://www.grhfluid.com

Email: grh@grhcn.com


Innovation Leads The Future

创新引领未来